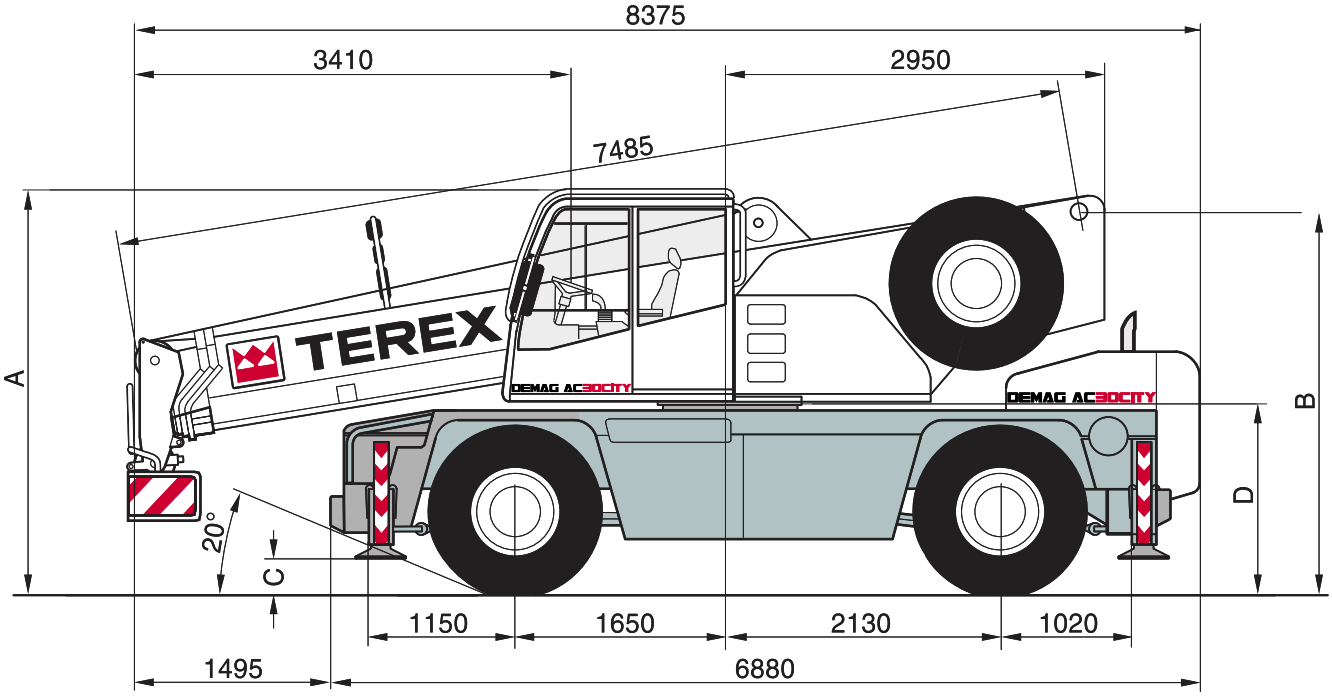
8375
3410
2950
7485
A
B
C
D
20°
TEREX
DEMAG AC30CITY
DEMAG AC30CITY
1150
1650
2130
1020
1495
6880

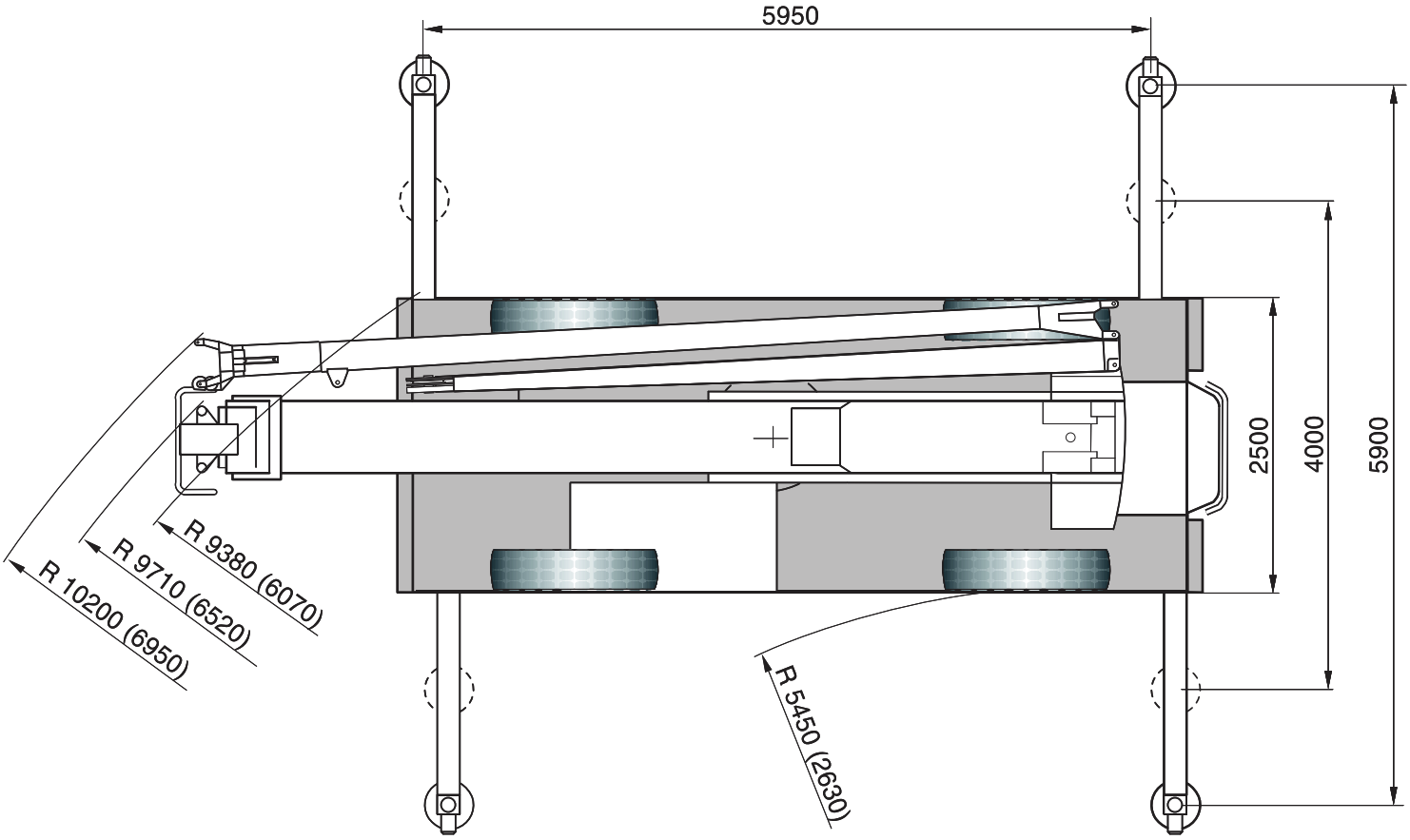
5950
2500
4000
5900
R 9380 (6070)
R 9710 (6520)
R 10200 (6950)
R 5450 (2630)